USER MANUAL

REFRIGERATOR FREEZER

For Home Use Only

GR-RS601WE-PMY(**)
GR-RS603WE-PMY(**)



TOSHIBA

CONTENTS

Safety warnings **2**

Product Installation **6**

Structure and functions **8**

Operation Instructions **10**

Cleaning and maintenance **13**

Troubleshooting **18**

- Thank you very much for purchasing this Toshiba product.
- Read this user manual and become completely familiar with the product before. Use in order to use this product safely and correctly.
- Keep this user manual in a handy place for future reference.
- Make sure that you received your warranty.

Safety warnings

Explanation of symbols

WARNING!
Used when there is a risk for personal injury.

CAUTION!
Used when there is a risk for damage to the product.

NOTE!
General information that you should be aware of.

Intended use

This product is only intended for: Indoor use in a household or a similar environment such as:

- Staff kitchen areas in shops, offices and other working environments;
- Farm houses;
- By clients in hotels, motels and other residential type environments;
- Bed and breakfast type environments;
- Catering and similar non-retail applications.
- Household use, such as storage of food and beverages.

General safety



Warning
Risk of fire/Flammable materials

This symbol alerts you to flammable materials that can ignite and cause a fire if you do not take care.

Refrigerant and cyclopentane foaming material used for the appliance are flammable. Therefore, when the appliance is scrapped, it shall be kept away from any fire source and be recovered by a special recovering company with corresponding qualification other than be disposed by combustion, so as to prevent damage to the environment or any other harm.

WARNING!

Keep ventilation openings, in the appliance enclosure or in the built-in structure, clear of obstruction.Do not use mechanical devices or other means to accelerate the defrosting process, other than those recommended by the manufacturer.

- Do not damage the refrigerant circuit.
- Do not use electrical appliances inside the food storage compartments of the appliance, unless they are of the type recommended by the manufacturer.
- Please dispose of the product in accordance with local regulations as it contains flammable propellant gas and refrigerant.
- To avoid a hazard due to instability of the appliance, it must be fixed in accordance with the instructions.
- When positioning the appliance, ensure the supply cord is not trapped or damaged.
- For a freestanding appliance: this refrigerating appliance is not intended to be used as a built-in appliance. **(*)**

WARNING!

- The necessity that, for doors or lids fitted with locks and keys, the keys be kept out of the reach of children and not in the vicinity of the refrigerating appliance, in order to prevent children from being locked inside .
- Destroy carton, plastic bags, and any exterior wrapping material immediately after the product is unpacked.
- Children should never use these items to play. Cartons covered with rugs, bedspreads, plastic sheets or stretch wrap may become airtight chambers, and can quickly cause suffocation.

Remove all staples from the carton. Staples can cause severe cuts, and destroy finishes if they come in contact with other appliances or furniture.

Risk of child entrapment. Before you throw away your old refrigerator or freezer:

- Take off the doors.
- Leave the shelves in place so that children may not easily climb inside.

Risk of injury and damage!

WARNING!

- Never put frozen food in your mouth immediately after taking it out of the freezer.
- Avoid prolonged skin contact with frozen food, ice and the pipes in the freezer compartment.
- Do not store explosive substances such as aerosol cans with a flammable propellant in this appliance. Also do not place flammable products near the product.
- Do not store beer, drinks or other liquids in bottles or tightly closed containers in the freezer compartment!

CAUTION!

- The storage recommendations should be strictly adhered to.
- Store pre-packed frozen food in accordance with the frozen food manufacturer's instructions.
- To prevent the frozen food from getting too warm while defrosting, which can shorten its storage life, take precautions such as wrapping the food in multiple layers of newspaper.
- Do not freeze frozen food again once it has thawed out.
- Food needs to be packed into bags before it is put into the product. Liquids need to be stored in bottles or capped containers in order to avoid a spill.

WARNING!

- Check the compressor label on the rear of the appliance or the rating label inside the fridge to see which refrigerant is used for your appliance. When this product contains flammable gas, contact your local authority in regard to safe disposal of this product.
- When transporting and setting up the unit, make sure that no parts of the refrigerant circuit are damaged.

If the refrigerant circuit is damaged:

- Avoid open flames and sources of ignition at all costs.
- Ventilate the room in which the appliance is located thoroughly.

Electrical safety

WARNING!

- Incorrect electrical installation or excessive mains voltage can lead to electric shocks!
- Only connect your fridge-freezer to a properly installed earthed socket if the mains voltage of the socket corresponds to the specification on the rating label*.
- Do not use extension cords or ungrounded (two-pin) adapters.
- Make sure that all electrical cables outside the appliance are protected from damage (e.g. by animals or sharp edges).
- Do not locate multiple portable socket outlets or portable power supplies at the rear of the appliance.
- Switch off the unit and disconnect the mains plug from the mains socket when you are not using the unit.
- If the supply cord is damaged, it must be replaced by the manufacturer, its service agent or similarly qualified persons in order to avoid a hazard.
- If the products are equipped with LED, do not remove the lighting cover and LED yourself. Any replacement or maintenance of the LED lamps is intended to be made by the manufacturer, its service agent or similar qualified person. **(*)**
- When replacing the interior lighting (Incandescent lamp) of the product, always unplug the product - otherwise there is a risk of electric shock.**(*)**

This product is not recommended for use with sockets or main switch with the AFCI/GFCI function, otherwise it may cause false tripping.

- It's not pose a safety risk when tripped.
- If tripping persists, it is recommended to replace the sockets or main switch without AFCI/GFCI function.

CAUTION!

To avoid contamination of food, please respect the following instructions:

- Opening the door for long periods can cause a significant increase of the temperature in the compartments of the appliance.
- Clean regularly surfaces that can come in contact with food and accessible drainage systems.
- Clean water tanks if they have not been used for 48h; flush the water system connected to a water supply if water has not been drawn for 5 days. (Note1)(*)
- Store raw meat and fish in suitable containers in the refrigerator, so that it is not in contact with or drip onto other food.
- Two-star frozen-food compartments are suitable for storing pre-frozen food, storing or making ice-cream and making ice cubes. (Note 2)(*)
- 1-star, 2-star and 3-star compartments are not suitable for the freezing of fresh food. (note 3)(*)
- For appliances without a 4-star compartment: this refrigerating appliance is not suitable for freezing foodstuffs. (note 4)(*)
- If the refrigerating appliance is left empty for long periods, switch off, defrost, clean, dry, and leave the door open to prevent mould developing within the appliance.
- **WARNING:** Fill with potable water only. (Suitable for Water Dispenser)(*)
- **WARNING:** Connect to potable water supply only. (Suitable for ice making machine) (*)

(*): This feature varies depending on the model purchased.

Note 1,2,3,4: Please confirm whether it is applicable according to your product compartment type.

CAUTION!

- The appliance is not suitable for the storage and cooling of medicines, blood plasma, laboratory preparations or similar substances and products underlying the Medical Device Directive 2007/47/EC.
- Plastic parts that come into contact with oils/acids (animal or vegetable) over a long period of time or frequently age more quickly and can crack or break.

CAUTION! (For use in Europe)

- This appliance can be used by children aged from 8 years and above and persons with reduced physical, sensory or mental capabilities or lack of experience and knowledge if they have been given supervision or instruction concerning use of the appliance in a safe way and understand the hazards involved. Children shall not play with the appliance. Cleaning and user maintenance shall not be made by children without supervision.
- Children aged from 3 to 8 years are allowed to load and unload refrigerating appliances.



This product is marked in compliance with European Directive 2012/19/EU, Waste Electrical and Electronic Equipment (WEEE). The symbol on the product or on its packaging indicates that this product should not be treated as household waste. Instead it shall be handed over to the applicable collection point for the recycling of electrical and electronic equipment.

Product Installation

Before the first use

The packaging must be undamaged. Check the device for transport damage. Do not connect a damaged device under any circumstances. In case of damage, please contact the supplier.

1. Removing the packaging

Remove all packaging materials and any promotional stickers.

Recycling is better for the environment, so keep paper and plastic waste separated.

2. Placing the appliance

Place the product in a well ventilated room with a flat surface.

3. Levelling the appliance

Ensure that the appliance is level. If necessary, adjust the left and right leveling feet.

4. Connecting the appliance

After levelling the appliance, leave it standing for at least 2 hours before inserting the plug in the socket.

5. Cleaning the appliance

In the meantime, clean the interior of the appliance with a damp cloth and warm water containing some washing-up liquid, all-purpose cleaner or soda.

Wipe the interior once more with a damp cloth using clean water and then thoroughly dry everything.

Dimensions and Clearances

Too small of a distance from adjacent items may result in the degradation of freezing capability and increased electricity costs.

Allow over 100 mm of clearance at both sides and the top, and 50-75 mm at the back when installing the appliance.

CAUTION!

Be careful not to damage the power cord when approaching the wall.

To avoid a hazard due to instability of the appliance, it must be fixed in accordance with the instructions..

Ambient temperature

This appliance is designed to operate in ambient temperature specified by its category marked onthe rating plate.

Depending on the climate class, this refrigerator is intended to be used at an ambient temperature range as specified in the following table.

Climate Class	Ambient temperature (from...to...)
SN	+10 °C to +32 °C
N	+16 °C to +32 °C
ST	+16 °C to +38 °C
T	+16 °C to +43 °C

Space requirement diagram

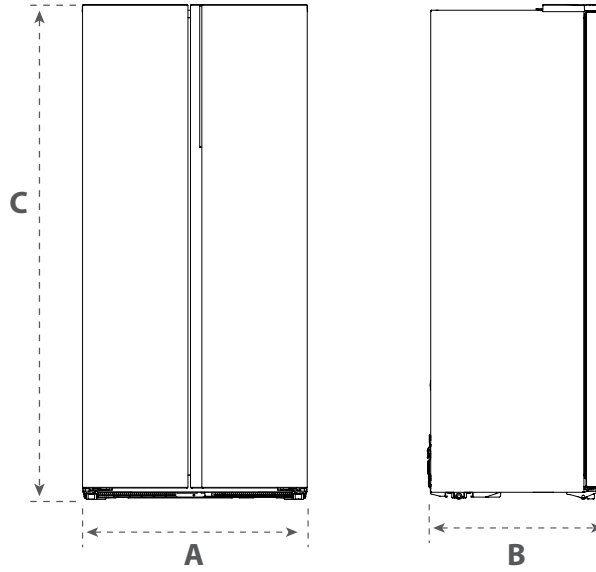

Width (A)	Depth (B)	Overall Height (C)
794	635	1745

Notice: All dimensions in mm

Energy saving tips

The appliance should be located in the coolest area of the room, away from heat producing appliances or heating ducts, and out of the direct sunlight.

Let hot foods cool to room temperature before placing in the appliance. Overloading the appliance forces the compressor to run longer. Foods that freeze too slowly may lose quality, or spoil.

Be sure to wrap foods properly, and wipe containers dry before placing them in the appliance.This cuts down on frost build-up inside the appliance.

Appliance storage bin should not be lined with aluminum foil, wax paper, or paper toweling. Liners interfere with cold air circulation, making the appliance less efficient.

Organize and label food to reduce door openings and extended searches. Remove as many items as needed at one time, and close the door as soon as possible.

Structure and functions

Key components

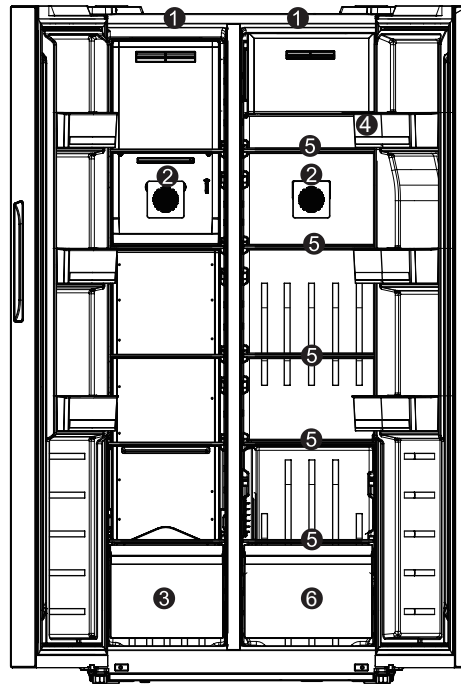

Parts, features, and options vary by model. Your model may not include every option.

1	Ceiling light	**3**	Freezer drawer	**5**	Glass shelf
2	Deodorizing block	**4**	Bottle frame	**6**	Wild vegetable drawer

NOTE!

Drawers, food boxes, shelves, etc. placed according to the position in the picture above are the most energy efficient.

The picture above is only for reference. The actual configuration will depend on the physical product or statement by the distributor

Storing food

Refrigerating chamber

- The refrigerating chamber is suitable for storage of a variety of fruits, vegetables, beverages and other food consumed in the short term.
- Cooking foods shall not be put in the refrigerating chamber until cooled to room temperature.
- Foods are recommended to be sealed up before putting into the refrigerator.
- The glass shelves can be adjusted up or down for a reasonable amount of storage space and easy use.

Freezing chamber

- The freezing chamber may keep food fresh for a long time and it is mainly used to store frozen foods and making ice.
- The freezing chamber is suitable for storage of meat, fish, rice balls and other foods not to be consumed in short term.
- Chunks of meat are recommended to be divided into small pieces for easy access.
- Please be noted food shall be consumed within the shelf time.

NOTE!

Storage of too much food during operation after the initial refrigerator. Foods stored shall not block the air outlet; or otherwise the freezing effect will also be adversely affected.

Temperature range of storage area

Refrigerating chamber	Glass shelf area	-1.5°C~6.5°C
	Bottle frame area	3°C~8°C
	Wild vegetable drawer	3°C~8°C
Freezing chamber	Glass shelf area	-14°C~-23°C
	Bottle frame area	-14°C~-20°C
	Freezer drawer	-14°C~-20°C

NOTE!

The above temperatures are approximate values under the conditions of an external environment of 32°C, with the door closed and without load.

Operation Instructions

Control panel and features

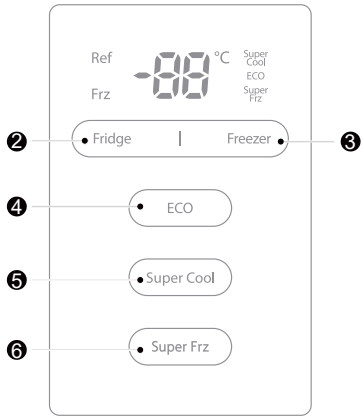

Description

1 Indication area

ECO	The icon appears when the ECO is operating.(Fridge compartment 7°C, Freezer compartment -16°C)
Super Cool	Indicates that the Super Cool function is on. (Chiller compartment 1°C)
Super Frz	Indicates that the Super Freezer function is on. (Freezer compartment -24°C)
Ref	Displays the current or desired temperature of the fridge.
Frz	Displays the current or desired temperature of the freezer.

NOTE!

The actual control panel may differ from model to model.

Button

2 Fridge button

3 Freezer button

4 ECO button

5 Super Cool button

6 Super Freezer button

Display

Upon initial power-on, the full display lasts for 3 seconds, accompanied by a startup chime, then it enters normal operation mode. (The initial set temperatures for the refrigerator compartment and freezer compartment upon first power-on are 4°C and -20°C, respectively.) When there are no faults, the set temperature of the refrigeration compartment is displayed. Under normal circumstances, the system locks after10 seconds without any door openings or button operations. Opening the refrigerator door lights up the display, and closing the refrigerator door turns off the display.

Lock / Unlock

Under normal circumstances, if neither the door is opened nor any button is pressed within 10 seconds, the display will lock; while in the locked state, the display will turn on after pressing any button.

Temperature setting

Press the **"Fridge"** or **"Freezer"** to select the fridge or freezer temperature. (Chiller compartment 1~7°C, Freezer compartment -16 ~-24°C),The system works after 10 seconds without any door openings or button operations.

Super Cool Mode

Press the **"Super Cool"** button to enter or exit the Super Cool mode. In this mode, the chille compartment temperature is set to 1°C. Upon exiting, the compartment temperature will revert to the previously set level.

Super Freezer Mode

Press the **"Super Frz"** button to enter or exit the Super Frz mode. In this mode, the freezer compartment temperature is set to -24°C. Upon exiting, the compartment temperature will revert to the previously set level.

ECO Mode

Press the ECO button to activate the ECO mode, indicated by the ECO light. In this mode, the chiller compartment operates at 7°C and the freezer compartment at -16°C. If you want to exit ECO mode, press the ECO or Freezer button again. The chiller and freezer compartment temperatures will return to the levels before the eco mode.

Door Open Alarm

If your refrigerator door remains open for about 120 seconds, you will hear a buzzer sound such as beep beep beep. The alarm repeats every minute, increasing in frequency—four beeps after the first minute, five after the next, up to 30 beeps per minute. At this time, you can turn off the buzzer sound by closing the refrigerator door or pressing any button. The sound of the buzzer varies among different models, please refer to the refrigerator purchased.

Door Open Sound

Long press the **"Fridge and Freezer"** button at the same time for 3 seconds to turn on or off the door opening sound.

Fault prompt

When the following faults appear on the display screen, it indicates that the refrigerator has faults. Under some faults, the refrigerator can still refrigerate, but you should contact for repair as soon as possible to realize the optimal operation of the refrigerator.

Fault code	Fault description
E1	Refrigerating chamber temperature sensor fault
E2	Freezing chamber temperature sensor fault
E5	Freezing and defrosting sensor fault
E6	Communication fault
E7	Ambient temperature sensor fault
L3	Cooling fan fault
L4	Cooling fan speed is abnormal

NOTE!

The quick-freezing function is designed to maintain the nutritional value of the food in the freezer. It can freeze the food in the shortest time. If a large amount of food is frozen at one time, it is recommended that the user turn on the quick-freezing function and put the food in. At this time, the freezing speed of the freezer compartment is increased, which can quickly freeze the food, effectively lock the nutrition of the food, and facilitate storage.

Cleaning and maintenance

Overall cleaning

- Dusts behind the refrigerator and on the ground shall be timely cleaned to improve the cooling effect and energy saving.
- Check the door seals regularly to make sure there are no debris. Clean the door seals with a soft cloth dampened with soapy water or diluted detergent.
- The interior of the refrigerator should be cleaned regularly to avoid odor.
- Please turn off the power before cleaning interior, remove all foods, drinks, shelves, drawers, etc.
- Use a soft cloth or sponge to clean the inside of the refrigerator, with two tablespoons of baking soda and a liter of warm water. Then rinse with water and wipe clean. After cleaning, open the door and let it dry naturally before turning on the power.
- For areas that are difficult to clean in the refrigerator (such as narrow sandwiches area, gaps or corners), it is recommended to wipe them regularly with a soft rag, soft brush, etc. and when necessary, combined with some auxiliary tools (such as thin sticks) to ensure no contaminants or bacterials accumulation in these areas.
- Do not use soap, detergent, scrub powder, spray cleaner, etc., as these may cause odors in the interior of the refrigerator or contaminated food.
- Clean the door tray, shelves and drawers with a soft cloth dampened with soapy water or diluted detergent. Dry with a soft cloth or dry naturally.
- Do not use hard brushes, wire wool, wire brushes, abrasives (such as toothpastes), organic solvents (such as alcohol, acetone, Isoamyl acetate, etc.), boiling water, acid or alkaline items, which may damage the fridge surface and interior. Boiling water and organic solvents such as benzene may deform or damage plastic parts.



- Do not rinse directly with water or other liquids during cleaning to avoid short circuits or affect electrical insulation after immersion.

CAUTION!

Please unplug the refrigerator for defrost and cleaning.

Replacing the LED-lamps

WARNING!

Any replacement or maintenance of the LED lamps is intended to be made by the manufacturer, its service agent or similar qualified person.

This product contains a light sources of energy efficiency class (G).

Adjustment of Glass Shelf

- Refrigerating chamber: The height of the glass shelf can be adjusted. The glass shelf needs to be aligned with the track and pushed into the slot. The track has a total of 6 layers.
- Freezing chamber: The height of the glass shelf can be adjusted. The glass shelf needs to be aligned with the track and pushed into the slot. The track has a total of 6 layers.

Steps for adjusting the glass shelf

1. Lift the rear part of the glass shelf so that the decorative strip at the back comes out of the slot.
2. While flipping the glass shelf outward, pull it out.
3. Flip the glass shelf to a vertical position and then move it upwards.
4. After moving to the desired position, flip the glass shelf inward and place it.

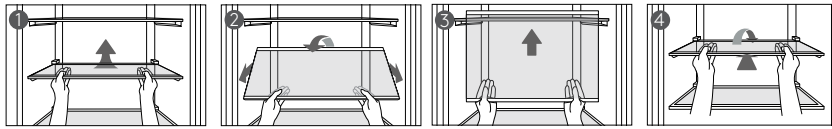

NOTE!

When removing and placing the glass shelf, handle it gently and avoid bumping it against the refrigerator frame.

Align the glass shelf with the slots and press down gently to ensure it is securely locked in place without any looseness.

If you need more help, please scan the QR code on the right to get the video guide for adjusting the glass shelf.

Cleaning of door tray

According to the direction arrow in the figure below, use both hands to squeeze the tray, and push it upward, then you can take it out.

After washing the tray having been taken out, you can adjust its installing height in accordance with your requirement.

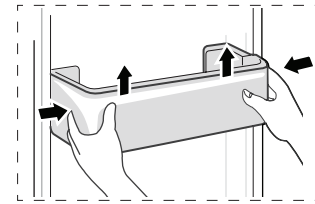

Cleaning of glass shelf

Adjust or clean the shelves according to your requirement.

The adjustment guide for glass shelf is detailed in the instructions above.

Defrosting

The refrigerator is made based on the air-cooling principle and thus has automatic defrosting function. Frost formed due to change of season or temperature may also be manually removed by disconnection of the appliance from power supply or by wiping with a dry towel.

Out of operation

Power failure:

In case of power failure, even if it is in summer, foods inside the appliance can be kept for several hours; during the power failure, the times of door opening shall be reduced, and no more fresh food shall be put into the appliance.

Long-time nonuse:

The appliance shall be unplugged and then cleaned; then the door are left open to prevent odor.

CAUTION!

The appliance shall run continuously once it is started. Generally, the operation of the appliance shall not be interrupted; otherwise the service life may be impaired.

Addition of Freshening Installation and Replacement Instructions

(1) Installation Steps for Chiller Compartment

a. Remove the sealed freshening component from the wild vegetable drawer, open the sealing lm, and take out the freshening component.

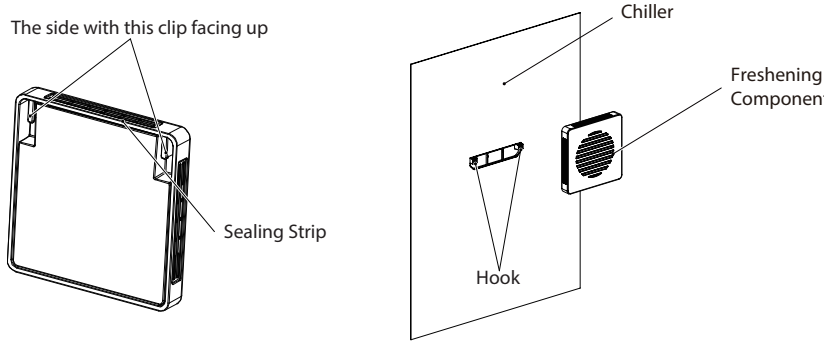

b. Remove the sealing strip from the top of the back of the freshening component.

c. Align the freshening component with the air duct, move the freshening component from top to bottom, attach the clip to the air duct hook. After moving, please ensure that the freshening component is properly installed.

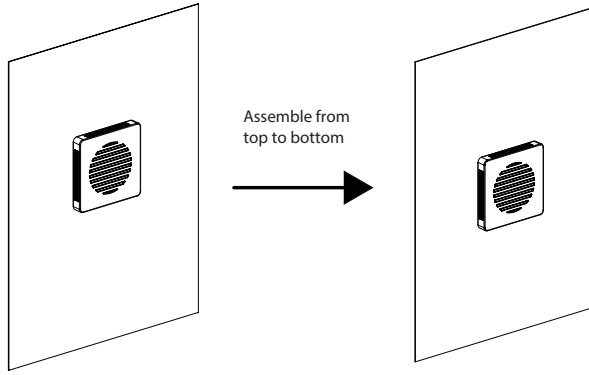

(2) Installation Steps for Freezer Compartment

a. Remove the sealed freshening component from the freezer drawer, open the sealing lm, and take out the freshening component.

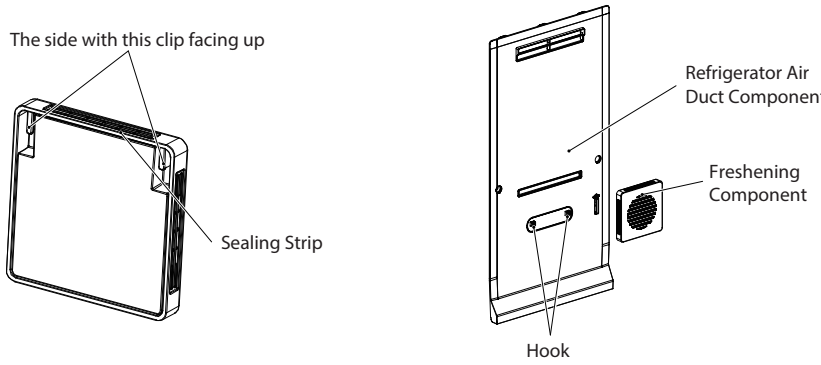

b. Remove the sealing strip from the top of the back of the freshening component.

c. Align the freshening component with the air duct, move the freshening component from top to bottom, attach the clip to the air duct hook. After moving, please ensure that the freshening component is properly installed.

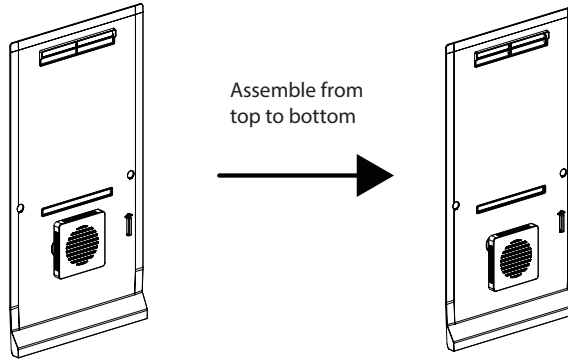

(3) Deodorizer Notice

a. This product is not edible.

b. Please place in a location out of reach of children.

c. Avoid direct sunlight or high-temperature storage.

d. Do not use for any other purpose.

e. When using the deodorizer component, ensure it stands upright.

f. Replace the deodorizer component in the refrigerator every 5-6 months, or when the gel remains only to the position shown in the diagram.

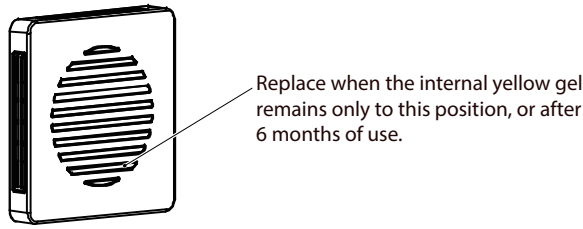

Troubleshooting

You may try to solve the following simple problems by yourself. If them cannot be solved, please contact the after-sales department.

Occurrence	Possible cause / inspection items
Failed operation	Check whether the appliance is connected to power or whether the plug is in well contact Check whether the voltage is too low Check whether there is a power failure or partial circuits have tripped
Odor	Odorous foods shall be tightly wrapped Check whether there is any rotten food Clean the inside of the refrigerator Change the deodorizing block
Long-time operation of the compressor	Long operation of the refrigerator is normal in summer when the ambient temperature is high. It is not suggestible having too much food in the appliance at the same time. Food shall get cool before being put into the appliance The doors are opened too frequently
Light fails to get lit	Check whether the refrigerator is connected to power supply and whether the illuminating light is damaged Have the light replaced by a specialist
Doors can not be properly closed	The door is stuck by food packages Too much food is placedThe doors is stuck by food packages. Too much food is placed the refrigerator is tilted.
Loud noises	Check whether the floor is level and whether the refrigerator is placed on stable ground. Check whether accessories are placed at proper locations
Door seal fails to be tight	Remove foreign matters on the door seal Heat the door seal and then cool it for restoration (or blow it with an electrical drier or use a hot towel for heating)
Water pan overflows	There is too much food in the chamber or food stored contains too much water,resulting in heavy defrosting The doors are not closed properly, resulting in frosting due to entry of air and increased water due to defrosting
Hot housing	Heat dissipation of the built-in condenser via the housing, which is normal When housing becomes hot due to high ambient temperature, storage of too much food or shutdown of the compressor is shut down, provide sound ventilation to facilitate heat dissipation
Surface condensation	Condensation on the exterior surface and door seals of the refrigerator is normal when the ambient humidity is too high. Just wipe the condensate with a clean towel
Abnormal noise	Buzz: The compressor may produce buzzes during operation, and the buzzes are loud particularly upon start or stop. This is normal. Creak: Refrigerant flowing inside of the appliance may produce creak, which is normal

#DetailsMatter

https://www.toshiba-lifestyle.com/my/